wwPDB X-ray Structure Validation Summary Report (i)

Jan 31, 2016 – 07:18 PM GMT

PDB ID	:	1EYB
Title	:	CRYSTAL STRUCTURE OF APO HUMAN HOMOGENTISATE DIOXYGENASE
Authors	:	Timm, D.E.; Titus, G.P.; Penalva, M.A.; Mueller, H.A.; de Cordoba, S.M.
Deposited on	:	2000-05-05
Resolution	:	1.90 Å(reported)

This is a wwPDB X-ray Structure Validation Summary Report for a publicly released PDB entry.
We welcome your comments at validation@mail.wwpdb.org
A user guide is available at
http://wwpdb.org/validation/2016/XrayValidationReportHelp
with specific help available everywhere you see the (i) symbol.

The following versions of software and data (see references (1)) were used in the production of this report:

MolProbity	:	4.02b-467
Mogul	:	1.7 (RC4), CSD as536be (2015)
Xtriage (Phenix)	:	1.9-1692
EDS	:	rb-20026688
Percentile statistics	:	20151230.v01 (using entries in the PDB archive December 30th 2015)
Refmac	:	5.8.0135
CCP4	:	6.5.0
Ideal geometry (proteins)	:	Engh & Huber (2001)
Ideal geometry (DNA, RNA)	:	Parkinson et al. (1996)
Validation Pipeline (wwPDB-VP)	:	trunk26865

1 Overall quality at a glance (i)

The following experimental techniques were used to determine the structure:
X-RAY DIFFRACTION

The reported resolution of this entry is 1.90 Å.

Percentile scores (ranging between 0-100) for global validation metrics of the entry are shown in the following graphic. The table shows the number of entries on which the scores are based.

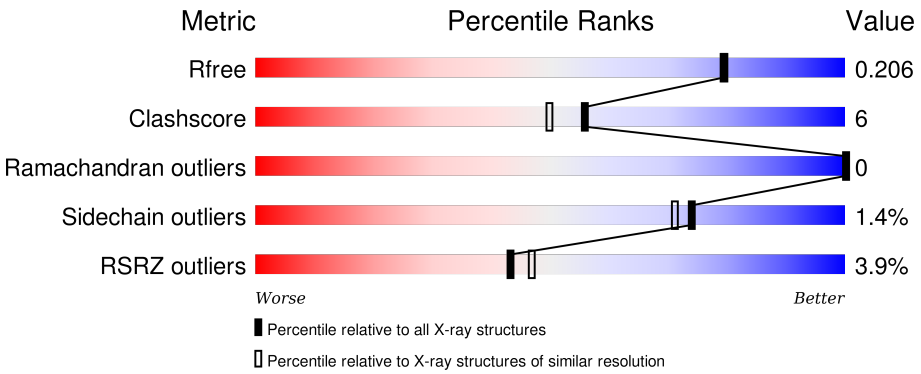

Metric	Whole archive (#Entries)	Similar resolution (#Entries, resolution range(Å))
R_{free}	91344	4755 (1.90-1.90)
Clashscore	102246	5398 (1.90-1.90)
Ramachandran outliers	100387	5338 (1.90-1.90)
Sidechain outliers	100360	5339 (1.90-1.90)
RSRZ outliers	91569	4766 (1.90-1.90)

The table below summarises the geometric issues observed across the polymeric chains and their fit to the electron density. The red, orange, yellow and green segments on the lower bar indicate the fraction of residues that contain outliers for >=3, 2, 1 and 0 types of geometric quality criteria. A grey segment represents the fraction of residues that are not modelled. The numeric value for each fraction is indicated below the corresponding segment, with a dot representing fractions <=5% The upper red bar (where present) indicates the fraction of residues that have poor fit to the electron density. The numeric value is given above the bar.

Mol	Chain	Length	Quality of chain
1	A	471	3% 80% 8% • 11%

2 Entry composition (i)

There are 2 unique types of molecules in this entry. The entry contains 3786 atoms, of which 0 are hydrogens and 0 are deuteriums.

In the tables below, the ZeroOcc column contains the number of atoms modelled with zero occupancy, the AltConf column contains the number of residues with at least one atom in alternate conformation and the Trace column contains the number of residues modelled with at most 2 atoms.

- Molecule 1 is a protein called HOMOGENTISATE 1,2-DIOXYGENASE.

Mol	Chain	Residues	Atoms						ZeroOcc	AltConf	Trace
			Total	C	N	O	S	Se			
1	A	419	3303	2120	565	599	10	9	0	0	0

There are 36 discrepancies between the modelled and reference sequences:

Chain	Residue	Modelled	Actual	Comment	Reference
A	-25	MSE	-	EXPRESSION TAG	UNP Q93099
A	-24	GLY	-	EXPRESSION TAG	UNP Q93099
A	-23	HIS	-	EXPRESSION TAG	UNP Q93099
A	-22	HIS	-	EXPRESSION TAG	UNP Q93099
A	-21	HIS	-	EXPRESSION TAG	UNP Q93099
A	-20	HIS	-	EXPRESSION TAG	UNP Q93099
A	-19	HIS	-	EXPRESSION TAG	UNP Q93099
A	-18	HIS	-	EXPRESSION TAG	UNP Q93099
A	-17	HIS	-	EXPRESSION TAG	UNP Q93099
A	-16	HIS	-	EXPRESSION TAG	UNP Q93099
A	-15	HIS	-	EXPRESSION TAG	UNP Q93099
A	-14	HIS	-	EXPRESSION TAG	UNP Q93099
A	-13	SER	-	EXPRESSION TAG	UNP Q93099
A	-12	SER	-	EXPRESSION TAG	UNP Q93099
A	-11	GLY	-	EXPRESSION TAG	UNP Q93099
A	-10	HIS	-	EXPRESSION TAG	UNP Q93099
A	-9	ILE	-	EXPRESSION TAG	UNP Q93099
A	-8	ASP	-	EXPRESSION TAG	UNP Q93099
A	-7	ASP	-	EXPRESSION TAG	UNP Q93099
A	-6	ASP	-	EXPRESSION TAG	UNP Q93099
A	-5	ASP	-	EXPRESSION TAG	UNP Q93099
A	-4	LYS	-	EXPRESSION TAG	UNP Q93099
A	-3	HIS	-	EXPRESSION TAG	UNP Q93099
A	-2	MSE	-	EXPRESSION TAG	UNP Q93099
A	-1	GLY	-	EXPRESSION TAG	UNP Q93099
A	0	SER	-	EXPRESSION TAG	UNP Q93099
A	1	MSE	MET	ENGINEERED	UNP Q93099

Continued on next page...

Continued from previous page...

Chain	Residue	Modelled	Actual	Comment	Reference
A	142	MSE	MET	ENGINEERED	UNP Q93099
A	172	MSE	MET	ENGINEERED	UNP Q93099
A	186	MSE	MET	ENGINEERED	UNP Q93099
A	283	MSE	MET	ENGINEERED	UNP Q93099
A	339	MSE	MET	ENGINEERED	UNP Q93099
A	343	MSE	MET	ENGINEERED	UNP Q93099
A	368	MSE	MET	ENGINEERED	UNP Q93099
A	396	MSE	MET	ENGINEERED	UNP Q93099
A	399	MSE	MET	ENGINEERED	UNP Q93099

- Molecule 2 is water.

Mol	Chain	Residues	Atoms		ZeroOcc	AltConf
			Total	O		
2	A	483	483	483	0	0

3 Residue-property plots (i)

These plots are drawn for all protein, RNA and DNA chains in the entry. The first graphic for a chain summarises the proportions of errors displayed in the second graphic. The second graphic shows the sequence view annotated by issues in geometry and electron density. Residues are color-coded according to the number of geometric quality criteria for which they contain at least one outlier: green = 0, yellow = 1, orange = 2 and red = 3 or more. A red dot above a residue indicates a poor fit to the electron density (RSRZ > 2). Stretches of 2 or more consecutive residues without any outlier are shown as a green connector. Residues present in the sample, but not in the model, are shown in grey.

- Molecule 1: HOMOGENTISATE 1,2-DIOXYGENASE

Chain A:

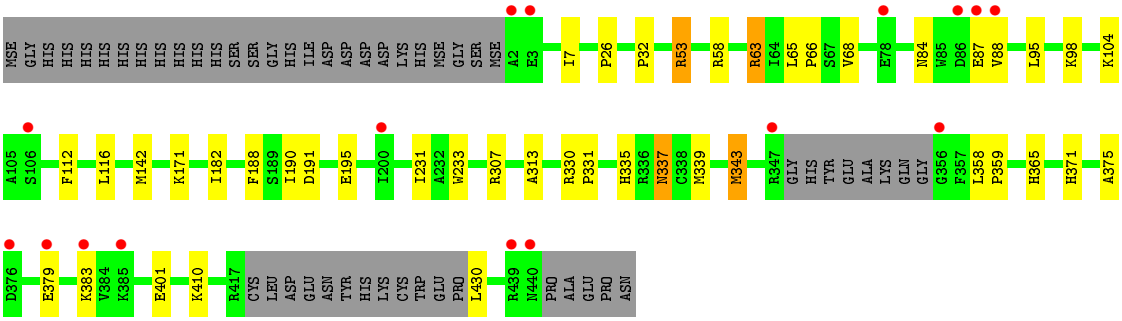

4 Data and refinement statistics (i)

Property	Value	Source
Space group	P 63 2 2	Depositor
Cell constants a, b, c, α, β, γ	158.38Å 158.38Å 93.46Å 90.00° 90.00° 120.00°	Depositor
Resolution (Å)	30.00 – 1.90 29.82 – 1.90	Depositor EDS
% Data completeness (in resolution range)	93.0 (30.00-1.90) 92.7 (29.82-1.90)	Depositor EDS
R_{merge}	0.06	Depositor
R_{sym}	(Not available)	Depositor
$< I/\sigma(I) >$ [1]	1.45 (at 1.89Å)	Xtriage
Refinement program	REFMAC	Depositor
R, R_{free}	0.192 , 0.222 0.178 , 0.206	Depositor DCC
R_{free} test set	2577 reflections (5.35%)	DCC
Wilson B-factor (Å^2)	21.6	Xtriage
Anisotropy	0.780	Xtriage
Bulk solvent k_{sol}(e/Å^3), B_{sol}(Å^2)	0.39 , 63.6	EDS
Estimated twinning fraction	No twinning to report.	Xtriage
L-test for twinning[2]	$< \|L\| > = 0.49$, $< L^2 > = 0.32$	Xtriage
Outliers	0 of 50741 reflections	Xtriage
F_o,F_c correlation	0.95	EDS
Total number of atoms	3786	wwPDB-VP
Average B, all atoms (Å^2)	27.0	wwPDB-VP

Xtriage's analysis on translational NCS is as follows: *The largest off-origin peak in the Patterson function is 6.00% of the height of the origin peak. No significant pseudotranslation is detected.*

[1] Intensities estimated from amplitudes.

[2] Theoretical values of $< |L| >$, $< L^2 >$ for acentric reflections are 0.5, 0.375 respectively for untwinned datasets, and 0.333, 0.2 for perfectly twinned datasets.

5 Model quality (i)

5.1 Standard geometry (i)

The Z score for a bond length (or angle) is the number of standard deviations the observed value is removed from the expected value. A bond length (or angle) with $|Z| > 5$ is considered an outlier worth inspection. RMSZ is the root-mean-square of all Z scores of the bond lengths (or angles).

Mol	Chain	Bond lengths		Bond angles	
		RMSZ	$\#\|Z\| >5$	RMSZ	$\#\|Z\| >5$
1	A	0.47	0/3392	1.01	7/4590 (0.2%)

There are no bond length outliers.

The worst 5 of 7 bond angle outliers are listed below:

Mol	Chain	Res	Type	Atoms	Z	Observed(^{o})	Ideal(^{o})
1	A	307	ARG	CD-NE-CZ	23.18	156.04	123.60
1	A	307	ARG	NE-CZ-NH1	19.17	129.89	120.30
1	A	307	ARG	NE-CZ-NH2	-14.96	112.82	120.30
1	A	343	MSE	CA-CB-CG	12.38	134.34	113.30
1	A	53	ARG	NE-CZ-NH2	-7.73	116.44	120.30

There are no chirality outliers.

There are no planarity outliers.

5.2 Too-close contacts (i)

In the following table, the Non-H and H(model) columns list the number of non-hydrogen atoms and hydrogen atoms in the chain respectively. The H(added) column lists the number of hydrogen atoms added and optimized by MolProbity. The Clashes column lists the number of clashes within the asymmetric unit, whereas Symm-Clashes lists symmetry related clashes.

Mol	Chain	Non-H	H(model)	H(added)	Clashes	Symm-Clashes
1	A	3303	0	3202	40	0
2	A	483	0	0	11	1
All	All	3786	0	3202	40	1

The all-atom clashscore is defined as the number of clashes found per 1000 atoms (including hydrogen atoms). The all-atom clashscore for this structure is 6.

The worst 5 of 40 close contacts within the same asymmetric unit are listed below, sorted by their clash magnitude.

Atom-1	Atom-2	Interatomic distance (Å)	Clash overlap (Å)
1:A:112:PHE:HB3	1:A:142:MSE:HE2	1.32	1.10
1:A:343:MSE:SE	2:A:1480:HOH:O	2.35	0.93
1:A:87:GLU:HG3	1:A:88:VAL:HG23	1.56	0.85
1:A:337:ASN:HD22	1:A:339:MSE:H	1.25	0.85
1:A:87:GLU:HB2	1:A:410:LYS:HE3	1.66	0.76

All (1) symmetry-related close contacts are listed below. The label for Atom-2 includes the symmetry operator and encoded unit-cell translations to be applied.

Atom-1	Atom-2	Interatomic distance (Å)	Clash overlap (Å)
2:A:1067:HOH:O	2:A:1326:HOH:O[10_665]	2.12	0.08

5.3 Torsion angles (i)

5.3.1 Protein backbone (i)

In the following table, the Percentiles column shows the percent Ramachandran outliers of the chain as a percentile score with respect to all X-ray entries followed by that with respect to entries of similar resolution.

The Analysed column shows the number of residues for which the backbone conformation was analysed, and the total number of residues.

Mol	Chain	Analysed	Favoured	Allowed	Outliers	Percentiles
1	A	413/471 (88%)	402 (97%)	11 (3%)	0	100 100

There are no Ramachandran outliers to report.

5.3.2 Protein sidechains (i)

In the following table, the Percentiles column shows the percent sidechain outliers of the chain as a percentile score with respect to all X-ray entries followed by that with respect to entries of similar resolution.

The Analysed column shows the number of residues for which the sidechain conformation was analysed, and the total number of residues.

Mol	Chain	Analysed	Rotameric	Outliers	Percentiles
1	A	358/394 (91%)	353 (99%)	5 (1%)	74 71

All (5) residues with a non-rotameric sidechain are listed below:

Mol	Chain	Res	Type
1	A	58	ARG
1	A	68	VAL
1	A	95	LEU
1	A	116	LEU
1	A	337	ASN

Some sidechains can be flipped to improve hydrogen bonding and reduce clashes. 5 of 8 such sidechains are listed below:

Mol	Chain	Res	Type
1	A	238	GLN
1	A	440	ASN
1	A	337	ASN
1	A	177	ASN
1	A	292	HIS

5.3.3 RNA (i)

There are no RNA molecules in this entry.

5.4 Non-standard residues in protein, DNA, RNA chains (i)

There are no non-standard protein/DNA/RNA residues in this entry.

5.5 Carbohydrates (i)

There are no carbohydrates in this entry.

5.6 Ligand geometry (i)

There are no ligands in this entry.

5.7 Other polymers (i)

There are no such residues in this entry.

5.8 Polymer linkage issues (i)

There are no chain breaks in this entry.

6 Fit of model and data (i)

6.1 Protein, DNA and RNA chains (i)

In the following table, the column labelled '#RSRZ> 2' contains the number (and percentage) of RSRZ outliers, followed by percent RSRZ outliers for the chain as percentile scores relative to all X-ray entries and entries of similar resolution. The OWAB column contains the minimum, median, 95th percentile and maximum values of the occupancy-weighted average B-factor per residue. The column labelled 'Q< 0.9' lists the number of (and percentage) of residues with an average occupancy less than 0.9.

Mol	Chain	Analysed	<RSRZ>	#RSRZ>2	OWAB(Å^2)	Q<0.9
1	A	410/471 (87%)	-0.12	16 (3%) 43 47	16, 23, 42, 57	0

The worst 5 of 16 RSRZ outliers are listed below:

Mol	Chain	Res	Type	RSRZ
1	A	356	GLY	6.6
1	A	2	ALA	5.8
1	A	86	ASP	4.9
1	A	87	GLU	4.7
1	A	88	VAL	3.6

6.2 Non-standard residues in protein, DNA, RNA chains (i)

There are no non-standard protein/DNA/RNA residues in this entry.

6.3 Carbohydrates (i)

There are no carbohydrates in this entry.

6.4 Ligands (i)

There are no ligands in this entry.

6.5 Other polymers (i)

There are no such residues in this entry.