wwPDB X-ray Structure Validation Summary Report (i)

Feb 19, 2016 – 07:24 PM GMT

PDB ID	:	4PF9
Title	:	Crystal structure of insulin degrading enzyme complexed with inhibitor
Authors	:	Wang, Y.; Guo, S.
Deposited on	:	2014-04-28
Resolution	:	2.50 Å(reported)

This is a wwPDB X-ray Structure Validation Summary Report for a publicly released PDB entry.
We welcome your comments at validation@mail.wwpdb.org
A user guide is available at
http://wwpdb.org/validation/2016/XrayValidationReportHelp
with specific help available everywhere you see the (i) symbol.

The following versions of software and data (see references (1)) were used in the production of this report:

MolProbity	:	4.02b-467
Mogul	:	1.7.1 (RC1), CSD as537be (2016)
Xtriage (Phenix)	:	1.9-1692
EDS	:	rb-20026982
Percentile statistics	:	20151230.v01 (using entries in the PDB archive December 30th 2015)
Refmac	:	5.8.0135
CCP4	:	6.5.0
Ideal geometry (proteins)	:	Engh & Huber (2001)
Ideal geometry (DNA, RNA)	:	Parkinson et al. (1996)
Validation Pipeline (wwPDB-VP)	:	rb-20026982

1 Overall quality at a glance (i)

The following experimental techniques were used to determine the structure:
X-RAY DIFFRACTION

The reported resolution of this entry is 2.50 Å.

Percentile scores (ranging between 0-100) for global validation metrics of the entry are shown in the following graphic. The table shows the number of entries on which the scores are based.

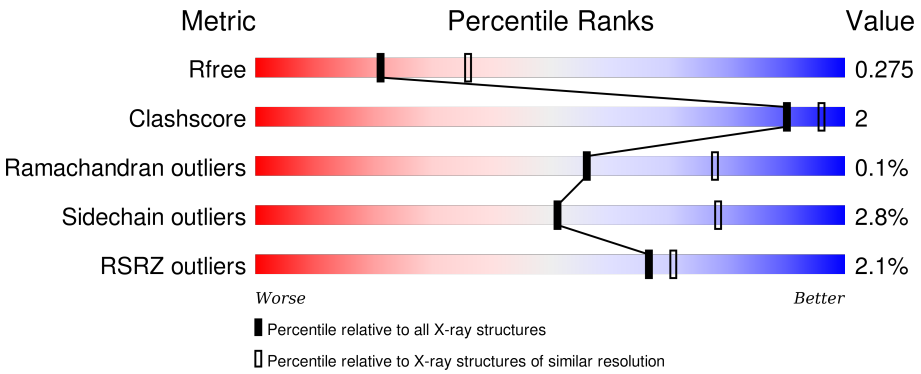

Metric	Whole archive (#Entries)	Similar resolution (#Entries, resolution range(Å))
R_{free}	91344	3553 (2.50-2.50)
Clashscore	102246	4242 (2.50-2.50)
Ramachandran outliers	100387	4156 (2.50-2.50)
Sidechain outliers	100360	4158 (2.50-2.50)
RSRZ outliers	91569	3562 (2.50-2.50)

The table below summarises the geometric issues observed across the polymeric chains and their fit to the electron density. The red, orange, yellow and green segments on the lower bar indicate the fraction of residues that contain outliers for >=3, 2, 1 and 0 types of geometric quality criteria. A grey segment represents the fraction of residues that are not modelled. The numeric value for each fraction is indicated below the corresponding segment, with a dot representing fractions <=5% The upper red bar (where present) indicates the fraction of residues that have poor fit to the electron density. The numeric value is given above the bar.

Mol	Chain	Length	Quality of chain
1	A	989	2% 88% 9% •
1	B	989	2% 88% 9% •

2 Entry composition (i)

There are 4 unique types of molecules in this entry. The entry contains 16127 atoms, of which 0 are hydrogens and 0 are deuteriums.

In the tables below, the ZeroOcc column contains the number of atoms modelled with zero occupancy, the AltConf column contains the number of residues with at least one atom in alternate conformation and the Trace column contains the number of residues modelled with at most 2 atoms.

- Molecule 1 is a protein called Insulin-degrading enzyme.

Mol	Chain	Residues	Atoms					ZeroOcc	AltConf	Trace
			Total	C	N	O	S			
1	A	959	7848	5054	1317	1455	22	0	1	0
1	B	956	7821	5038	1313	1448	22	0	0	0

There are 50 discrepancies between the modelled and reference sequences:

Chain	Residue	Modelled	Actual	Comment	Reference
A	31	MET	-	initiating methionine	UNP P14735
A	32	GLY	-	expression tag	UNP P14735
A	33	HIS	-	expression tag	UNP P14735
A	34	HIS	-	expression tag	UNP P14735
A	35	HIS	-	expression tag	UNP P14735
A	36	HIS	-	expression tag	UNP P14735
A	37	HIS	-	expression tag	UNP P14735
A	38	HIS	-	expression tag	UNP P14735
A	39	GLY	-	expression tag	UNP P14735
A	40	ARG	-	expression tag	UNP P14735
A	41	ALA	-	expression tag	UNP P14735
A	110	LEU	CYS	engineered mutation	UNP P14735
A	111	GLN	GLU	engineered mutation	UNP P14735
A	171	SER	CYS	engineered mutation	UNP P14735
A	178	ALA	CYS	engineered mutation	UNP P14735
A	257	VAL	CYS	engineered mutation	UNP P14735
A	414	LEU	CYS	engineered mutation	UNP P14735
A	573	ASN	CYS	engineered mutation	UNP P14735
A	590	SER	CYS	engineered mutation	UNP P14735
A	789	SER	CYS	engineered mutation	UNP P14735
A	812	ALA	CYS	engineered mutation	UNP P14735
A	819	ALA	CYS	engineered mutation	UNP P14735
A	904	SER	CYS	engineered mutation	UNP P14735
A	966	ASN	CYS	engineered mutation	UNP P14735
A	974	ALA	CYS	engineered mutation	UNP P14735

Continued on next page...

Continued from previous page...

Chain	Residue	Modelled	Actual	Comment	Reference
B	31	MET	-	initiating methionine	UNP P14735
B	32	GLY	-	expression tag	UNP P14735
B	33	HIS	-	expression tag	UNP P14735
B	34	HIS	-	expression tag	UNP P14735
B	35	HIS	-	expression tag	UNP P14735
B	36	HIS	-	expression tag	UNP P14735
B	37	HIS	-	expression tag	UNP P14735
B	38	HIS	-	expression tag	UNP P14735
B	39	GLY	-	expression tag	UNP P14735
B	40	ARG	-	expression tag	UNP P14735
B	41	ALA	-	expression tag	UNP P14735
B	110	LEU	CYS	engineered mutation	UNP P14735
B	111	GLN	GLU	engineered mutation	UNP P14735
B	171	SER	CYS	engineered mutation	UNP P14735
B	178	ALA	CYS	engineered mutation	UNP P14735
B	257	VAL	CYS	engineered mutation	UNP P14735
B	414	LEU	CYS	engineered mutation	UNP P14735
B	573	ASN	CYS	engineered mutation	UNP P14735
B	590	SER	CYS	engineered mutation	UNP P14735
B	789	SER	CYS	engineered mutation	UNP P14735
B	812	ALA	CYS	engineered mutation	UNP P14735
B	819	ALA	CYS	engineered mutation	UNP P14735
B	904	SER	CYS	engineered mutation	UNP P14735
B	966	ASN	CYS	engineered mutation	UNP P14735
B	974	ALA	CYS	engineered mutation	UNP P14735

- Molecule 2 is methyl [(2S)-2-[4-({5-[4-({(2S)-2-[(3S)-3-amino-2-oxopiperidin-1-yl]-2-cyclohexylacetyl}amino)phenyl]pentyl}oxy)phenyl]-3-(quinolin-3-yl)propyl]carbamate (three-letter code: 2Q6) (formula: $C_{44}H_{55}N_5O_5$).

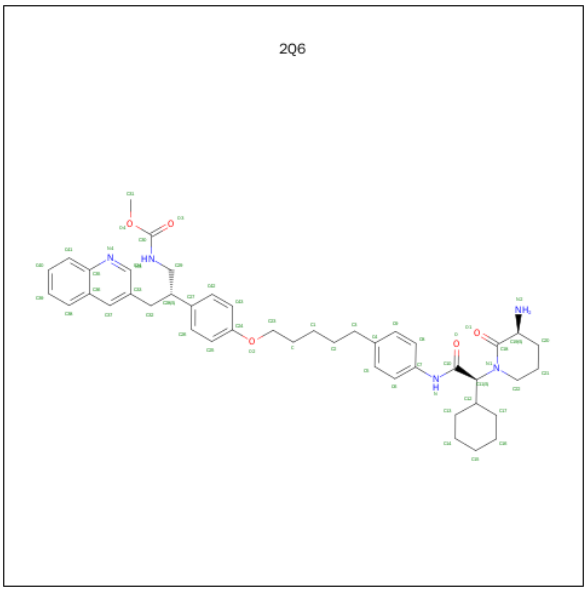

Mol	Chain	Residues	Atoms				ZeroOcc	AltConf
			Total	C	N	O		
2	A	1	54	44	5	5	0	0
2	B	1	54	44	5	5	0	0

- Molecule 3 is ZINC ION (three-letter code: ZN) (formula: Zn).

Mol	Chain	Residues	Atoms		ZeroOcc	AltConf
			Total	Zn		
3	B	1	1	1	0	0
3	A	1	1	1	0	0

- Molecule 4 is water.

Mol	Chain	Residues	Atoms		ZeroOcc	AltConf
			Total	O		
4	A	171	171	171	0	0
4	B	177	177	177	0	0

3 Residue-property plots (i)

These plots are drawn for all protein, RNA and DNA chains in the entry. The first graphic for a chain summarises the proportions of errors displayed in the second graphic. The second graphic shows the sequence view annotated by issues in geometry and electron density. Residues are color-coded according to the number of geometric quality criteria for which they contain at least one outlier: green = 0, yellow = 1, orange = 2 and red = 3 or more. A red dot above a residue indicates a poor fit to the electron density (RSRZ > 2). Stretches of 2 or more consecutive residues without any outlier are shown as a green connector. Residues present in the sample, but not in the model, are shown in grey.

- Molecule 1: Insulin-degrading enzyme

Chain A:

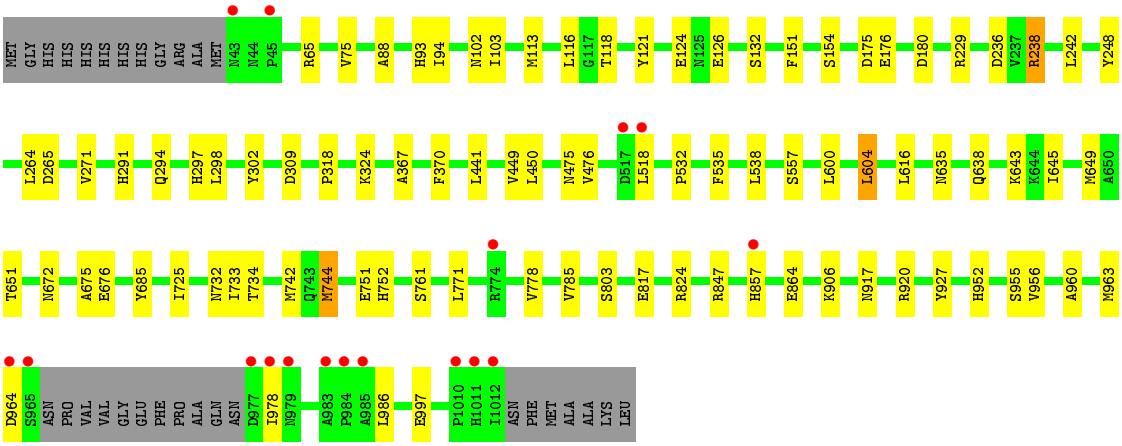

- Molecule 1: Insulin-degrading enzyme

Chain B:

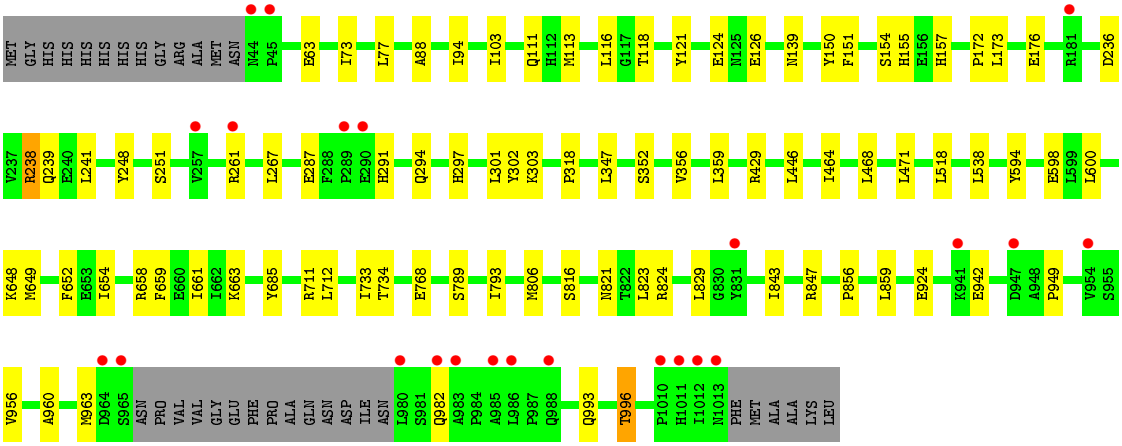

4 Data and refinement statistics (i)

Property	Value	Source
Space group	P 1 21 1	Depositor
Cell constants a, b, c, α, β, γ	79.25Å 116.42Å 124.47Å 90.00° 97.60° 90.00°	Depositor
Resolution (Å)	19.99 – 2.50 19.99 – 2.50	Depositor EDS
% Data completeness (in resolution range)	99.2 (19.99-2.50) 99.2 (19.99-2.50)	Depositor EDS
R_{merge}	(Not available)	Depositor
R_{sym}	0.11	Depositor
$< I/\sigma(I) >$ [1]	2.34 (at 2.50Å)	Xtriage
Refinement program	BUSTER 2.11.5	Depositor
R, R_{free}	0.195 , 0.253 0.206 , 0.275	Depositor DCC
R_{free} test set	1047 reflections (1.38%)	DCC
Wilson B-factor (Å^2)	40.5	Xtriage
Anisotropy	0.303	Xtriage
Bulk solvent k_{sol}(e/Å^3), B_{sol}(Å^2)	0.30 , 40.5	EDS
Estimated twinning fraction	No twinning to report.	Xtriage
L-test for twinning[2]	$< \|L\| > = 0.48$, $< L^2 > = 0.31$	Xtriage
Outliers	0 of 76761 reflections	Xtriage
F_o,F_c correlation	0.94	EDS
Total number of atoms	16127	wwPDB-VP
Average B, all atoms (Å^2)	46.0	wwPDB-VP

Xtriage's analysis on translational NCS is as follows: *The largest off-origin peak in the Patterson function is 3.00% of the height of the origin peak. No significant pseudotranslation is detected.*

[1] Intensities estimated from amplitudes.

[2] Theoretical values of $< |L| >$, $< L^2 >$ for acentric reflections are 0.5, 0.375 respectively for untwinned datasets, and 0.333, 0.2 for perfectly twinned datasets.

5 Model quality (i)

5.1 Standard geometry (i)

Bond lengths and bond angles in the following residue types are not validated in this section: 2Q6, ZN

The Z score for a bond length (or angle) is the number of standard deviations the observed value is removed from the expected value. A bond length (or angle) with $|Z| > 5$ is considered an outlier worth inspection. RMSZ is the root-mean-square of all Z scores of the bond lengths (or angles).

Mol	Chain	Bond lengths		Bond angles	
		RMSZ	$\#\|Z\| >5$	RMSZ	$\#\|Z\| >5$
1	A	0.47	0/8046	0.66	0/10884
1	B	0.47	0/8016	0.66	0/10843
All	All	0.47	0/16062	0.66	0/21727

There are no bond length outliers.

There are no bond angle outliers.

There are no chirality outliers.

There are no planarity outliers.

5.2 Too-close contacts (i)

In the following table, the Non-H and H(model) columns list the number of non-hydrogen atoms and hydrogen atoms in the chain respectively. The H(added) column lists the number of hydrogen atoms added and optimized by MolProbity. The Clashes column lists the number of clashes within the asymmetric unit, whereas Symm-Clashes lists symmetry related clashes.

Mol	Chain	Non-H	H(model)	H(added)	Clashes	Symm-Clashes
1	A	7848	0	7791	39	0
1	B	7821	0	7765	35	0
2	A	54	0	55	1	0
2	B	54	0	55	1	0
3	A	1	0	0	0	0
3	B	1	0	0	0	0
4	A	171	0	0	1	0
4	B	177	0	0	0	0
All	All	16127	0	15666	73	0

The all-atom clashscore is defined as the number of clashes found per 1000 atoms (including hydrogen atoms). The all-atom clashscore for this structure is 2.

The worst 5 of 73 close contacts within the same asymmetric unit are listed below, sorted by their clash magnitude.

Atom-1	Atom-2	Interatomic distance (Å)	Clash overlap (Å)
1:A:309:ASP:H	1:A:672:ASN:HD21	1.35	0.74
1:A:294:GLN:H	1:A:297:HIS:HD2	1.38	0.71
1:A:475:ASN:HB3	4:A:1281:HOH:O	1.89	0.71
1:A:616:LEU:HD11	1:A:638:GLN:HG3	1.78	0.66
1:A:635:ASN:HD21	1:A:732:ASN:HD22	1.48	0.61

There are no symmetry-related clashes.

5.3 Torsion angles (i)

5.3.1 Protein backbone (i)

In the following table, the Percentiles column shows the percent Ramachandran outliers of the chain as a percentile score with respect to all X-ray entries followed by that with respect to entries of similar resolution.

The Analysed column shows the number of residues for which the backbone conformation was analysed, and the total number of residues.

Mol	Chain	Analysed	Favoured	Allowed	Outliers	Percentiles
1	A	956/989 (97%)	921 (96%)	34 (4%)	1 (0%)	56 78
1	B	952/989 (96%)	913 (96%)	39 (4%)	0	100 100
All	All	1908/1978 (96%)	1834 (96%)	73 (4%)	1 (0%)	56 78

All (1) Ramachandran outliers are listed below:

Mol	Chain	Res	Type
1	A	175	ASP

5.3.2 Protein sidechains (i)

In the following table, the Percentiles column shows the percent sidechain outliers of the chain as a percentile score with respect to all X-ray entries followed by that with respect to entries of similar resolution.

The Analysed column shows the number of residues for which the sidechain conformation was analysed, and the total number of residues.

Mol	Chain	Analysed	Rotameric	Outliers	Percentiles	
1	A	856/878 (98%)	831 (97%)	25 (3%)	50	77
1	B	852/878 (97%)	830 (97%)	22 (3%)	54	81
All	All	1708/1756 (97%)	1661 (97%)	47 (3%)	51	78

5 of 47 residues with a non-rotameric sidechain are listed below:

Mol	Chain	Res	Type
1	A	906	LYS
1	B	103	ILE
1	B	824	ARG
1	A	978	ILE
1	B	111	GLN

Some sidechains can be flipped to improve hydrogen bonding and reduce clashes. 5 of 17 such sidechains are listed below:

Mol	Chain	Res	Type
1	B	155	HIS
1	B	157	HIS
1	B	573	ASN
1	A	672	ASN
1	B	575	ASN

5.3.3 RNA (i)

There are no RNA molecules in this entry.

5.4 Non-standard residues in protein, DNA, RNA chains (i)

There are no non-standard protein/DNA/RNA residues in this entry.

5.5 Carbohydrates (i)

There are no carbohydrates in this entry.

5.6 Ligand geometry (i)

Of 4 ligands modelled in this entry, 2 are monoatomic - leaving 2 for Mogul analysis.

In the following table, the Counts columns list the number of bonds (or angles) for which Mogul statistics could be retrieved, the number of bonds (or angles) that are observed in the model and the number of bonds (or angles) that are defined in the chemical component dictionary. The Link column lists molecule types, if any, to which the group is linked. The Z score for a bond length (or angle) is the number of standard deviations the observed value is removed from the expected value. A bond length (or angle) with $|Z| > 2$ is considered an outlier worth inspection. RMSZ is the root-mean-square of all Z scores of the bond lengths (or angles).

Mol	Type	Chain	Res	Link	Bond lengths			Bond angles		
					Counts	RMSZ	$\#\|Z\| > 2$	Counts	RMSZ	$\#\|Z\| > 2$
2	2Q6	A	1101	-	59,59,59	1.69	13 (22%)	73,79,79	1.77	6 (8%)
2	2Q6	B	1101	-	59,59,59	1.54	8 (13%)	73,79,79	1.62	6 (8%)

In the following table, the Chirals column lists the number of chiral outliers, the number of chiral centers analysed, the number of these observed in the model and the number defined in the chemical component dictionary. Similar counts are reported in the Torsion and Rings columns. '-' means no outliers of that kind were identified.

Mol	Type	Chain	Res	Link	Chirals	Torsions	Rings
2	2Q6	A	1101	-	-	0/40/62/62	0/6/6/6
2	2Q6	B	1101	-	-	0/40/62/62	0/6/6/6

The worst 5 of 21 bond length outliers are listed below:

Mol	Chain	Res	Type	Atoms	Z	Observed(Å)	Ideal(Å)
2	B	1101	2Q6	C25-C24	2.07	1.42	1.38
2	A	1101	2Q6	C8-C7	2.07	1.42	1.39
2	A	1101	2Q6	C36-C35	2.15	1.45	1.42
2	A	1101	2Q6	C26-C27	2.16	1.42	1.39
2	A	1101	2Q6	C6-C7	2.23	1.42	1.39

The worst 5 of 12 bond angle outliers are listed below:

Mol	Chain	Res	Type	Atoms	Z	Observed(^{o})	Ideal(^{o})
2	A	1101	2Q6	O4-C30-O3	-6.83	115.02	124.61
2	B	1101	2Q6	O4-C30-O3	-6.62	115.31	124.61
2	A	1101	2Q6	C20-C19-C18	-4.21	104.00	112.80
2	B	1101	2Q6	C33-C32-C28	-2.56	109.84	113.72
2	A	1101	2Q6	C33-C32-C28	-2.15	110.47	113.72

There are no chirality outliers.

There are no torsion outliers.

There are no ring outliers.

2 monomers are involved in 2 short contacts:

Mol	Chain	Res	Type	Clashes	Symm-Clashes
2	A	1101	2Q6	1	0
2	B	1101	2Q6	1	0

5.7 Other polymers (i)

There are no such residues in this entry.

5.8 Polymer linkage issues (i)

There are no chain breaks in this entry.

6 Fit of model and data (i)

6.1 Protein, DNA and RNA chains (i)

In the following table, the column labelled '#RSRZ> 2' contains the number (and percentage) of RSRZ outliers, followed by percent RSRZ outliers for the chain as percentile scores relative to all X-ray entries and entries of similar resolution. The OWAB column contains the minimum, median, 95th percentile and maximum values of the occupancy-weighted average B-factor per residue. The column labelled 'Q< 0.9' lists the number of (and percentage) of residues with an average occupancy less than 0.9.

Mol	Chain	Analysed	<RSRZ>	#RSRZ>2			OWAB(Å^2)	Q<0.9
1	A	959/989 (96%)	-0.21	17 (1%)	71	75	25, 44, 70, 118	0
1	B	956/989 (96%)	-0.25	23 (2%)	62	66	25, 43, 71, 130	0
All	All	1915/1978 (96%)	-0.23	40 (2%)	67	71	25, 44, 70, 130	0

The worst 5 of 40 RSRZ outliers are listed below:

Mol	Chain	Res	Type	RSRZ
1	B	1013	ASN	6.2
1	A	979	ASN	6.0
1	A	43	ASN	5.1
1	A	965	SER	5.0
1	A	1012	ILE	4.9

6.2 Non-standard residues in protein, DNA, RNA chains (i)

There are no non-standard protein/DNA/RNA residues in this entry.

6.3 Carbohydrates (i)

There are no carbohydrates in this entry.

6.4 Ligands (i)

In the following table, the Atoms column lists the number of modelled atoms in the group and the number defined in the chemical component dictionary. LLDF column lists the quality of electron density of the group with respect to its neighbouring residues in protein, DNA or RNA chains. The B-factors column lists the minimum, median, 95th percentile and maximum values of B factors of atoms in the group. The column labelled 'Q< 0.9' lists the number of atoms with occupancy less than 0.9.

Mol	Type	Chain	Res	Atoms	RSCC	RSR	LLDF	B-factors(Å^2)	Q<0.9
2	2Q6	A	1101	54/54	0.85	0.19	1.34	30,49,72,75	0
2	2Q6	B	1101	54/54	0.90	0.17	1.34	31,40,55,59	0
3	ZN	B	1102	1/1	0.98	0.03	-	76,76,76,76	0
3	ZN	A	1102	1/1	0.98	0.05	-	104,104,104,104	0

6.5 Other polymers (i)

There are no such residues in this entry.