wwPDB X-ray Structure Validation Summary Report (i)

Jan 31, 2016 – 10:52 PM GMT

PDB ID	:	1VKZ
Title	:	Crystal structure of Phosphoribosylamine--glycine ligase (TM1250) from Thermotoga maritima at 2.30 A resolution
Authors	:	Joint Center for Structural Genomics (JCSG)
Deposited on	:	2004-06-29
Resolution	:	2.30 Å(reported)

This is a wwPDB X-ray Structure Validation Summary Report for a publicly released PDB entry.
We welcome your comments at validation@mail.wwpdb.org
A user guide is available at
http://wwpdb.org/validation/2016/XrayValidationReportHelp
with specific help available everywhere you see the (i) symbol.

The following versions of software and data (see references (1)) were used in the production of this report:

MolProbity	:	4.02b-467
Mogul	:	1.7 (RC4), CSD as536be (2015)
Xtriage (Phenix)	:	1.9-1692
EDS	:	rb-20026688
Percentile statistics	:	20151230.v01 (using entries in the PDB archive December 30th 2015)
Refmac	:	5.8.0135
CCP4	:	6.5.0
Ideal geometry (proteins)	:	Engh & Huber (2001)
Ideal geometry (DNA, RNA)	:	Parkinson et al. (1996)
Validation Pipeline (wwPDB-VP)	:	trunk26865

1 Overall quality at a glance (i)

The following experimental techniques were used to determine the structure:
X-RAY DIFFRACTION

The reported resolution of this entry is 2.30 Å.

Percentile scores (ranging between 0-100) for global validation metrics of the entry are shown in the following graphic. The table shows the number of entries on which the scores are based.

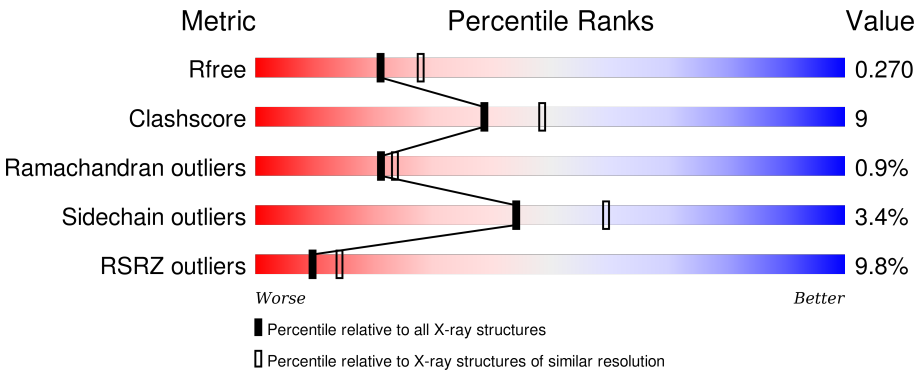

Metric	Whole archive (#Entries)	Similar resolution (#Entries, resolution range(Å))
R_{free}	91344	3852 (2.30-2.30)
Clashscore	102246	4452 (2.30-2.30)
Ramachandran outliers	100387	4410 (2.30-2.30)
Sidechain outliers	100360	4409 (2.30-2.30)
RSRZ outliers	91569	3857 (2.30-2.30)

The table below summarises the geometric issues observed across the polymeric chains and their fit to the electron density. The red, orange, yellow and green segments on the lower bar indicate the fraction of residues that contain outliers for >=3, 2, 1 and 0 types of geometric quality criteria. A grey segment represents the fraction of residues that are not modelled. The numeric value for each fraction is indicated below the corresponding segment, with a dot representing fractions <=5% The upper red bar (where present) indicates the fraction of residues that have poor fit to the electron density. The numeric value is given above the bar.

Mol	Chain	Length	Quality of chain
1	A	412	8% 74% 18% • 5%
1	B	412	10% 78% 15% • 5%

2 Entry composition (i)

There are 3 unique types of molecules in this entry. The entry contains 6190 atoms, of which 0 are hydrogens and 0 are deuteriums.

In the tables below, the ZeroOcc column contains the number of atoms modelled with zero occupancy, the AltConf column contains the number of residues with at least one atom in alternate conformation and the Trace column contains the number of residues modelled with at most 2 atoms.

- Molecule 1 is a protein called Phosphoribosylamine--glycine ligase.

Mol	Chain	Residues	Atoms						ZeroOcc	AltConf	Trace
			Total	C	N	O	S	Se			
1	A	391	3027	1941	515	563	1	7	0	0	0
1	B	391	3038	1945	516	569	1	7	0	0	0

There are 40 discrepancies between the modelled and reference sequences:

Chain	Residue	Modelled	Actual	Comment	Reference
A	-11	MSE	-	LEADER SEQUENCE	UNP Q9X0X7
A	-10	GLY	-	LEADER SEQUENCE	UNP Q9X0X7
A	-9	SER	-	LEADER SEQUENCE	UNP Q9X0X7
A	-8	ASP	-	LEADER SEQUENCE	UNP Q9X0X7
A	-7	LYS	-	LEADER SEQUENCE	UNP Q9X0X7
A	-6	ILE	-	LEADER SEQUENCE	UNP Q9X0X7
A	-5	HIS	-	LEADER SEQUENCE	UNP Q9X0X7
A	-4	HIS	-	LEADER SEQUENCE	UNP Q9X0X7
A	-3	HIS	-	LEADER SEQUENCE	UNP Q9X0X7
A	-2	HIS	-	LEADER SEQUENCE	UNP Q9X0X7
A	-1	HIS	-	LEADER SEQUENCE	UNP Q9X0X7
A	0	HIS	-	LEADER SEQUENCE	UNP Q9X0X7
A	1	MSE	MET	MODIFIED RESIDUE	UNP Q9X0X7
A	102	MSE	MET	MODIFIED RESIDUE	UNP Q9X0X7
A	188	MSE	MET	MODIFIED RESIDUE	UNP Q9X0X7
A	209	MSE	MET	MODIFIED RESIDUE	UNP Q9X0X7
A	220	MSE	MET	MODIFIED RESIDUE	UNP Q9X0X7
A	263	MSE	MET	MODIFIED RESIDUE	UNP Q9X0X7
A	307	MSE	MET	MODIFIED RESIDUE	UNP Q9X0X7
A	367	MSE	MET	MODIFIED RESIDUE	UNP Q9X0X7
B	-11	MSE	-	LEADER SEQUENCE	UNP Q9X0X7
B	-10	GLY	-	LEADER SEQUENCE	UNP Q9X0X7
B	-9	SER	-	LEADER SEQUENCE	UNP Q9X0X7
B	-8	ASP	-	LEADER SEQUENCE	UNP Q9X0X7
B	-7	LYS	-	LEADER SEQUENCE	UNP Q9X0X7

Continued on next page...

Continued from previous page...

Chain	Residue	Modelled	Actual	Comment	Reference
B	-6	ILE	-	LEADER SEQUENCE	UNP Q9X0X7
B	-5	HIS	-	LEADER SEQUENCE	UNP Q9X0X7
B	-4	HIS	-	LEADER SEQUENCE	UNP Q9X0X7
B	-3	HIS	-	LEADER SEQUENCE	UNP Q9X0X7
B	-2	HIS	-	LEADER SEQUENCE	UNP Q9X0X7
B	-1	HIS	-	LEADER SEQUENCE	UNP Q9X0X7
B	0	HIS	-	LEADER SEQUENCE	UNP Q9X0X7
B	1	MSE	MET	MODIFIED RESIDUE	UNP Q9X0X7
B	102	MSE	MET	MODIFIED RESIDUE	UNP Q9X0X7
B	188	MSE	MET	MODIFIED RESIDUE	UNP Q9X0X7
B	209	MSE	MET	MODIFIED RESIDUE	UNP Q9X0X7
B	220	MSE	MET	MODIFIED RESIDUE	UNP Q9X0X7
B	263	MSE	MET	MODIFIED RESIDUE	UNP Q9X0X7
B	307	MSE	MET	MODIFIED RESIDUE	UNP Q9X0X7
B	367	MSE	MET	MODIFIED RESIDUE	UNP Q9X0X7

- Molecule 2 is 1,2-ETHANEDIOL (three-letter code: EDO) (formula: $C_2H_6O_2$).

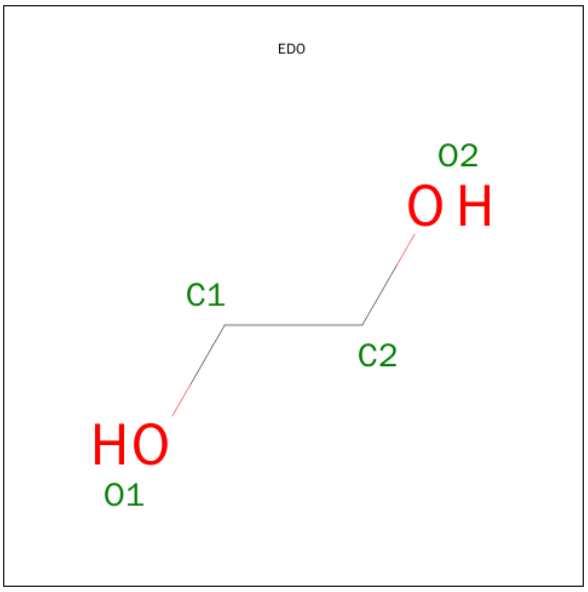

Mol	Chain	Residues	Atoms			ZeroOcc	AltConf
			Total	C	O		
2	B	1	4	2	2	0	0

- Molecule 3 is water.

Mol	Chain	Residues	Atoms		ZeroOcc	AltConf
			Total	O		
3	A	64	64	64	0	0

Continued on next page...

Continued from previous page...

Mol	Chain	Residues	Atoms		ZeroOcc	AltConf
			Total	O		
3	B	57	57	57	0	0

3 Residue-property plots (i)

These plots are drawn for all protein, RNA and DNA chains in the entry. The first graphic for a chain summarises the proportions of errors displayed in the second graphic. The second graphic shows the sequence view annotated by issues in geometry and electron density. Residues are color-coded according to the number of geometric quality criteria for which they contain at least one outlier: green = 0, yellow = 1, orange = 2 and red = 3 or more. A red dot above a residue indicates a poor fit to the electron density (RSRZ > 2). Stretches of 2 or more consecutive residues without any outlier are shown as a green connector. Residues present in the sample, but not in the model, are shown in grey.

- Molecule 1: Phosphoribosylamine--glycine ligase

Chain A:

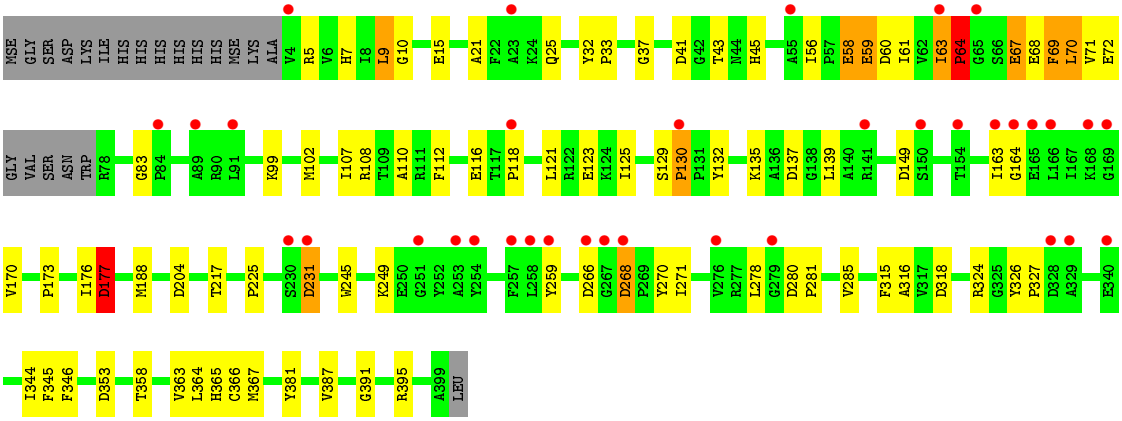

- Molecule 1: Phosphoribosylamine--glycine ligase

Chain B:

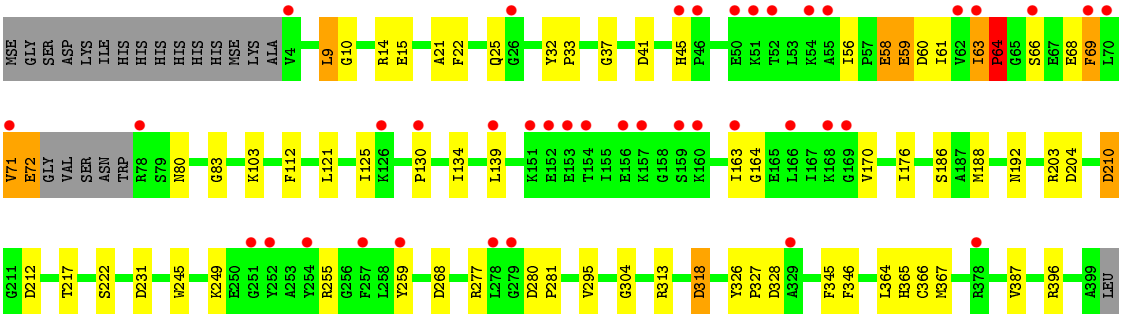

4 Data and refinement statistics (i)

Property	Value	Source
Space group	P 1 21 1	Depositor
Cell constants a, b, c, α, β, γ	63.74Å 78.44Å 85.02Å 90.00° 95.06° 90.00°	Depositor
Resolution (Å)	37.26 – 2.30 37.26 – 2.29	Depositor EDS
% Data completeness (in resolution range)	84.0 (37.26-2.30) 83.8 (37.26-2.29)	Depositor EDS
R_{merge}	0.05	Depositor
R_{sym}	(Not available)	Depositor
$< I/\sigma(I) >$ [1]	1.64 (at 2.29Å)	Xtriage
Refinement program	REFMAC 5.2.0000	Depositor
R, R_{free}	0.213 , 0.264 0.224 , 0.270	Depositor DCC
R_{free} test set	1560 reflections (5.25%)	DCC
Wilson B-factor (Å^2)	41.0	Xtriage
Anisotropy	0.589	Xtriage
Bulk solvent k_{sol}(e/Å^3), B_{sol}(Å^2)	0.37 , 56.8	EDS
Estimated twinning fraction	No twinning to report.	Xtriage
L-test for twinning[2]	$< \|L\| > = 0.53$, $< L^2 > = 0.37$	Xtriage
Outliers	2 of 31728 reflections (0.006%)	Xtriage
F_o,F_c correlation	0.95	EDS
Total number of atoms	6190	wwPDB-VP
Average B, all atoms (Å^2)	47.0	wwPDB-VP

Xtriage's analysis on translational NCS is as follows: *The analyses of the Patterson function reveals a significant off-origin peak that is 46.95 % of the origin peak, indicating pseudo translational symmetry.The chance of finding a peak of this or larger height randomly in a structure without pseudo translational symmetry is equal to 1.0641e-04.The detected translational NCS is most likely also responsible for the elevated intensity ratio.*

[1]Intensities estimated from amplitudes.

[2]Theoretical values of $< |L| >$, $< L^2 >$ for acentric reflections are 0.5, 0.375 respectively for untwinned datasets, and 0.333, 0.2 for perfectly twinned datasets.

5 Model quality (i)

5.1 Standard geometry (i)

Bond lengths and bond angles in the following residue types are not validated in this section: EDO

The Z score for a bond length (or angle) is the number of standard deviations the observed value is removed from the expected value. A bond length (or angle) with $|Z| > 5$ is considered an outlier worth inspection. RMSZ is the root-mean-square of all Z scores of the bond lengths (or angles).

Mol	Chain	Bond lengths		Bond angles	
		RMSZ	#$\|Z\|$ >5	RMSZ	#$\|Z\|$ >5
1	A	0.70	0/3085	0.87	11/4148 (0.3%)
1	B	0.73	0/3096	0.86	12/4163 (0.3%)
All	All	0.72	0/6181	0.86	23/8311 (0.3%)

Chiral center outliers are detected by calculating the chiral volume of a chiral center and verifying if the center is modelled as a planar moiety or with the opposite hand. A planarity outlier is detected by checking planarity of atoms in a peptide group, atoms in a mainchain group or atoms of a sidechain that are expected to be planar.

Mol	Chain	#Chirality outliers	#Planarity outliers
1	A	0	2
1	B	0	2
All	All	0	4

There are no bond length outliers.

The worst 5 of 23 bond angle outliers are listed below:

Mol	Chain	Res	Type	Atoms	Z	Observed(^{o})	Ideal(^{o})
1	A	60	ASP	CB-CG-OD2	8.05	125.54	118.30
1	A	41	ASP	CB-CG-OD2	7.79	125.31	118.30
1	A	137	ASP	CB-CG-OD2	7.61	125.14	118.30
1	B	255	ARG	NE-CZ-NH2	-7.07	116.77	120.30
1	B	231	ASP	CB-CG-OD2	6.40	124.06	118.30

There are no chirality outliers.

All (4) planarity outliers are listed below:

Mol	Chain	Res	Type	Group
1	A	58	GLU	Peptide

Continued on next page...

Continued from previous page...

Mol	Chain	Res	Type	Group
1	A	69	PHE	Peptide
1	B	58	GLU	Peptide
1	B	69	PHE	Peptide

5.2 Too-close contacts (i)

In the following table, the Non-H and H(model) columns list the number of non-hydrogen atoms and hydrogen atoms in the chain respectively. The H(added) column lists the number of hydrogen atoms added and optimized by MolProbity. The Clashes column lists the number of clashes within the asymmetric unit, whereas Symm-Clashes lists symmetry related clashes.

Mol	Chain	Non-H	H(model)	H(added)	Clashes	Symm-Clashes
1	A	3027	0	3018	59	0
1	B	3038	0	3021	50	0
2	B	4	0	6	0	0
3	A	64	0	0	0	0
3	B	57	0	0	3	0
All	All	6190	0	6045	109	0

The all-atom clashscore is defined as the number of clashes found per 1000 atoms (including hydrogen atoms). The all-atom clashscore for this structure is 9.

The worst 5 of 109 close contacts within the same asymmetric unit are listed below, sorted by their clash magnitude.

Atom-1	Atom-2	Interatomic distance (Å)	Clash overlap (Å)
1:A:56:ILE:HG21	1:A:61:ILE:HD11	1.57	0.86
1:B:318:ASP:CG	1:B:367:MSE:HE1	1.97	0.85
1:B:56:ILE:HG21	1:B:61:ILE:HD11	1.66	0.78
1:A:318:ASP:OD1	1:A:367:MSE:HE1	1.86	0.76
1:A:118:PRO:HG2	1:A:163:ILE:HD11	1.68	0.75

There are no symmetry-related clashes.

5.3 Torsion angles (i)

5.3.1 Protein backbone (i)

In the following table, the Percentiles column shows the percent Ramachandran outliers of the chain as a percentile score with respect to all X-ray entries followed by that with respect to entries of similar resolution.

The Analysed column shows the number of residues for which the backbone conformation was analysed, and the total number of residues.

Mol	Chain	Analysed	Favoured	Allowed	Outliers	Percentiles	
1	A	387/412 (94%)	368 (95%)	16 (4%)	3 (1%)	24	27
1	B	387/412 (94%)	369 (95%)	14 (4%)	4 (1%)	19	21
All	All	774/824 (94%)	737 (95%)	30 (4%)	7 (1%)	21	24

5 of 7 Ramachandran outliers are listed below:

Mol	Chain	Res	Type
1	A	59	GLU
1	A	64	PRO
1	B	59	GLU
1	B	64	PRO
1	A	130	PRO

5.3.2 Protein sidechains (i)

In the following table, the Percentiles column shows the percent sidechain outliers of the chain as a percentile score with respect to all X-ray entries followed by that with respect to entries of similar resolution.

The Analysed column shows the number of residues for which the sidechain conformation was analysed, and the total number of residues.

Mol	Chain	Analysed	Rotameric	Outliers	Percentiles	
1	A	309/325 (95%)	297 (96%)	12 (4%)	39	53
1	B	311/325 (96%)	302 (97%)	9 (3%)	50	66
All	All	620/650 (95%)	599 (97%)	21 (3%)	44	59

5 of 21 residues with a non-rotameric sidechain are listed below:

Mol	Chain	Res	Type
1	A	204	ASP
1	A	268	ASP
1	B	210	ASP
1	A	177	ASP
1	B	277	ARG

Some sidechains can be flipped to improve hydrogen bonding and reduce clashes. All (2) such sidechains are listed below:

Mol	Chain	Res	Type
1	B	192	ASN
1	B	388	HIS

5.3.3 RNA (i)

There are no RNA molecules in this entry.

5.4 Non-standard residues in protein, DNA, RNA chains (i)

There are no non-standard protein/DNA/RNA residues in this entry.

5.5 Carbohydrates (i)

There are no carbohydrates in this entry.

5.6 Ligand geometry (i)

1 ligand is modelled in this entry.

In the following table, the Counts columns list the number of bonds (or angles) for which Mogul statistics could be retrieved, the number of bonds (or angles) that are observed in the model and the number of bonds (or angles) that are defined in the chemical component dictionary. The Link column lists molecule types, if any, to which the group is linked. The Z score for a bond length (or angle) is the number of standard deviations the observed value is removed from the expected value. A bond length (or angle) with $|Z| > 2$ is considered an outlier worth inspection. RMSZ is the root-mean-square of all Z scores of the bond lengths (or angles).

Mol	Type	Chain	Res	Link	Bond lengths			Bond angles		
					Counts	RMSZ	$\#\|Z\| > 2$	Counts	RMSZ	$\#\|Z\| > 2$
2	EDO	B	401	-	3,3,3	0.82	0	2,2,2	0.35	0

In the following table, the Chirals column lists the number of chiral outliers, the number of chiral centers analysed, the number of these observed in the model and the number defined in the chemical component dictionary. Similar counts are reported in the Torsion and Rings columns. '-' means no outliers of that kind were identified.

Mol	Type	Chain	Res	Link	Chirals	Torsions	Rings
2	EDO	B	401	-	-	0/1/1/1	0/0/0/0

There are no bond length outliers.

There are no bond angle outliers.

There are no chirality outliers.

There are no torsion outliers.

There are no ring outliers.

No monomer is involved in short contacts.

5.7 Other polymers (i)

There are no such residues in this entry.

5.8 Polymer linkage issues (i)

There are no chain breaks in this entry.

6 Fit of model and data (i)

6.1 Protein, DNA and RNA chains (i)

In the following table, the column labelled '#RSRZ> 2' contains the number (and percentage) of RSRZ outliers, followed by percent RSRZ outliers for the chain as percentile scores relative to all X-ray entries and entries of similar resolution. The OWAB column contains the minimum, median, 95th percentile and maximum values of the occupancy-weighted average B-factor per residue. The column labelled 'Q< 0.9' lists the number of (and percentage) of residues with an average occupancy less than 0.9.

Mol	Chain	Analysed	<RSRZ>	#RSRZ>2			OWAB(Å^2)	Q<0.9
1	A	384/412 (93%)	0.72	35 (9%)	11	17	37, 46, 56, 67	0
1	B	384/412 (93%)	0.74	40 (10%)	8	12	37, 46, 57, 67	0
All	All	768/824 (93%)	0.73	75 (9%)	10	14	37, 46, 57, 67	0

The worst 5 of 75 RSRZ outliers are listed below:

Mol	Chain	Res	Type	RSRZ
1	A	163	ILE	6.8
1	B	71	VAL	5.1
1	B	168	LYS	4.9
1	B	50	GLU	4.8
1	B	156	GLU	4.7

6.2 Non-standard residues in protein, DNA, RNA chains (i)

There are no non-standard protein/DNA/RNA residues in this entry.

6.3 Carbohydrates (i)

There are no carbohydrates in this entry.

6.4 Ligands (i)

In the following table, the Atoms column lists the number of modelled atoms in the group and the number defined in the chemical component dictionary. LLDF column lists the quality of electron density of the group with respect to its neighbouring residues in protein, DNA or RNA chains. The B-factors column lists the minimum, median, 95th percentile and maximum values of B factors of atoms in the group. The column labelled 'Q< 0.9' lists the number of atoms with occupancy less than 0.9.

Mol	Type	Chain	Res	Atoms	RSCC	RSR	LLDF	B-factors(Å^2)	Q<0.9
2	EDO	B	401	4/4	0.96	0.11	-1.71	33,41,47,48	0

6.5 Other polymers (i)

There are no such residues in this entry.